FEDERAL CIRCUIT PATENT LAW CASE UPDATE

Varco, L.P. v. Pason Sys., 05-1136 (Fed. Cir. Feb. 1, 2006) (Rader, J.)

Disagreeing with the claim construction, the court vacated the district court's denial of Varco's motion for a preliminary injunction against Pason's oil-drilling control system. The district court improperly narrowed Varco's method claim by requiring a signal selection step to need manual operation, and requiring the relaying of signals to occur only as disclosed in an embodiment.

Varco owns U.S. Pat. No. 5,474,142 for a control system that regulates the rate of penetration of an oil drilling bit based on "a combination of four parameters (e.g., bit weight, drilling fluid pressure, drill string [21] torque, and drill string RPM)."

Method claim 14 was at issue. The court disagreed with the construction of the "selecting" signals step and the "relaying" signals step. The selection process required manual intervention under the trial court's approach, and the relaying of the signals could only occur via pneumatically operated valves, that is, using variable air pressure as the control signal. Under these constructions, Parson's automatic, non-manual, electronic system was unlikely to infringe to meet the standard for a preliminary injunction.

The court found evidence within the claim and elsewhere to find the construction overly narrow.

> The preamble recites that the method steps are to be performed automatically by the drilling rig. This language suggests that the selecting step is not limited to manual operation of valve selectors and/or manual calibration of regulators as construed by the district court. . . .
>
> In addition, the specification does not limit the selecting step to the manual operation of valve selectors or the manual calibration of regulators. Rather, the specification discloses an initial setup procedure in which an operator, using valve selectors 232-235, manually chooses the regulators 200-203 that will control the drilling operation once underway. . . . In effect, the district court erred by reading the initial setup or calibration step into the claimed selecting step. . . . With this initial adjustment in place, the drilling system then automatically selects between the primary and secondary controls during operation. Thus, the prosecution history confirms that selecting in claim 14 does not encompass the initial setup or calibration of the drilling system, but rather the conflict resolution process between primary and secondary controls during operation.

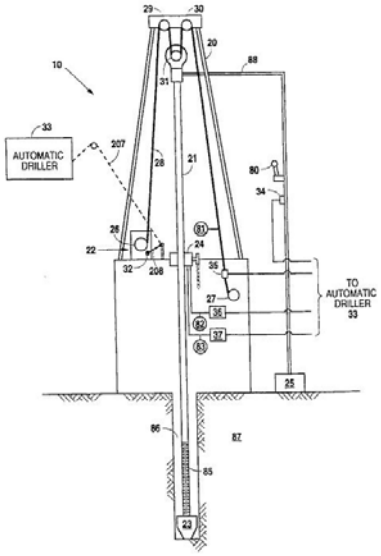

Differentiation between claim 15 and 14 also supported that claim 14 recited automatic processes.

In a similar analysis, the relaying step construction was overly narrow.

> [N]othing in the claim language requires or even suggests the use of pneumatically operated valves in performing the relaying step. Rather, the only discussion of pneumatically operated valves in the intrinsic record comes from the specification . . . This disclosure and corresponding Figures do not limit the invention as a whole to the use of pneumatically operated valves; rather they merely list such valves as but one example of relays operable in the present invention.

The University of Houston Law Center's Institute for Intellectual Property and Information Law is pleased to provide this information on patent law decisions.

© 2006 Greg R. Vetter. All rights reserved. Fully attributed noncommercial use of this document in whole permitted if accompanied by this paragraph.

Available at: www.fcplc.org.