FEDERAL CIRCUIT PATENT LAW CASE UPDATE

Golden Blount, Inc. v. Peterson, Co., 04-1609 (Fed. Cir. Feb. 15, 2006) (Linn, J)

In a dispute over fireplace burners, the court affirmed the district court's judgment that Peterson's device infringed Golden Blount's patent. In an earlier appeal the court affirmed several district court claim constructions, and its invalidity determination. In the present appeal, the evidence supported direct and indirect infringement, and it was not incorrect for the district court to rely on instruction sheets distributed with a component sold by Peterson that would lead users to assemble an infringing configuration. The court also affirmed the damages determination, except that it instructed the district court to back-out of the damages calculation units of the component repurchased from distributors. These units would have never been assembled by customers.

Golden Blount owns U.S. Pat. No. 5,988,159, for a "Gas-Fired Artificial Logs and Coals Burner Assembly." Peterson makes a competing device, which led to this suit.

In an earlier appeal the court dealt with certain issues.

> [W]e construed certain claims of the '159 patent, affirmed the validity determination, vacated the judgment as to infringement, and remanded for specific factual findings. See Golden Blount, Inc. v. Robert H. Peterson Co., 365 F.3d 1054 (Fed. Cir. 2004) ("Golden Blount I"). Because we vacated the judgment with respect to all issues of infringement, we also vacated and remanded the judgment as to willfulness, the exceptional nature of the case, and damages.

On remand, the district court held as follows.

> The district court found that Peterson both directly and indirectly infringed the '159 patent and that infringement was willful. The district court calculated lost-profit damages to be $429,256, trebled the award to $1,287,766, and awarded Golden Blount attorney fees and post-judgment interest.

The procedure on remand produced the first issue on appeal. The district court first adopted Peterson's findings, but later accepted Golden Blount's Rule 52(b) motion to amend its filings, in essence changing its mind on the infringement issue.

> The district court did not abuse its discretion in amending its findings and modifying its judgment accordingly.

The court affirmed the infringement finding. Evidence supported the direct acts of infringement, and it was not improper to rely on instruction sheets distributed with the alleged infringing product to infer direct infringement by users to support a finding of indirect infringement. Peterson shipped a component, called the EMB, so it was not "made" until assembled by distributors or users.

> Having introduced no evidence that anyone actually made or used the assembly in a manner contrary to the instructions so as to form a non-infringing assembly, Peterson cannot complain that the district court found that the EMB was not "suitable for substantial non-infringing use."

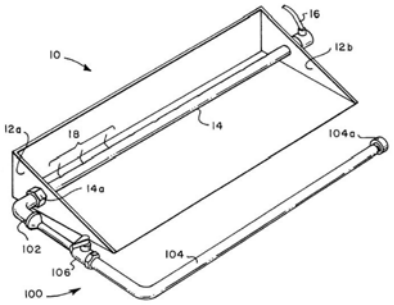

As to the willfulness issue, the court affirmed the district court.

> In explaining its willfulness finding, the district court stated that in the two and one-half years after Peterson received notice of the patent, Peterson never obtained a written opinion of counsel and that the oral opinions obtained by Peterson were rendered without counsel having examined either the patent's prosecution history or the accused device, and were thus incompetent.

Finally, the court affirmed the damages based on lost profits or, alternatively, the entire market value rule, except that it adjusted the award to account for "802 EMBs that [Peterson] bought back from distributors because those units never led to the formation of infringing devices."

> Golden Blount proffered sufficient evidence from which the district court could find that "but for" Peterson's sale of the EMB, which enabled the end-user to make the product covered by the '159 patent, the end-user would have turned to Golden Blount to satisfy its demand for the patented product. We reject Peterson's argument that the district court clearly erred in finding that the parties competed for sales of two-burner installations. Peterson stipulated that the EMB is made to be attached to Peterson's primary burner. A properly configured assembly infringes regardless whether the primary burner was bought years earlier or on the same day as the secondary burner. Moreover, based on the testimony of Hanft, who had sold some Peterson products in the past, the district court found that it was "standard practice in the industry" to sell the ember burner as part of the purchase of the entire burner assembly.

INSTITUTE FOR INTELLECTUAL PROPERTY & INFORMATION LAW
University of Houston Law Center
Houston, Texas 77204-6391

The University of Houston Law Center's Institute for Intellectual Property and Information Law is pleased to provide this information on patent law decisions.

© 2006 Greg R. Vetter. All rights reserved. Fully attributed noncommercial use of this document in whole permitted if accompanied by this paragraph.

Available at: www.fcplc.org.